EQ-4101
様式-26

HOSHIZAKI

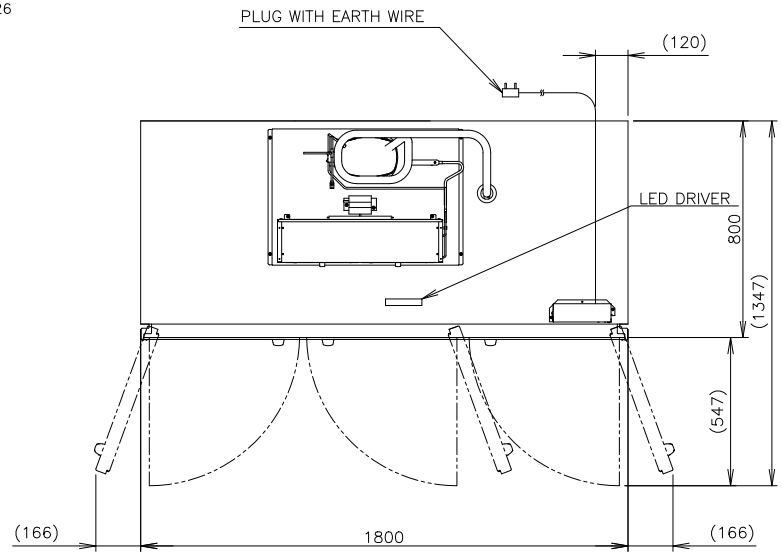

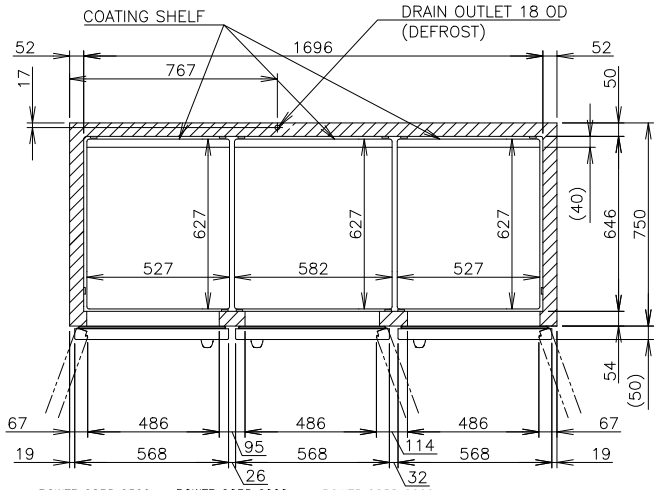

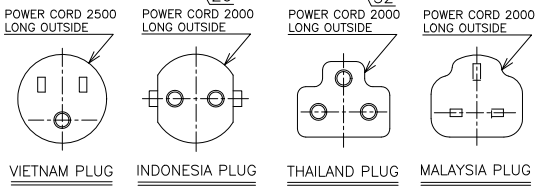

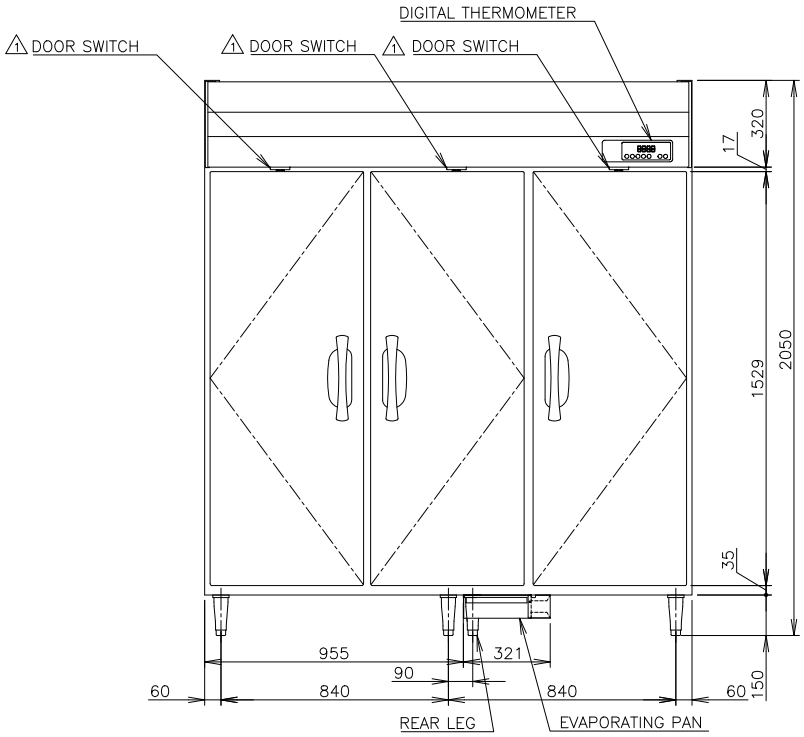

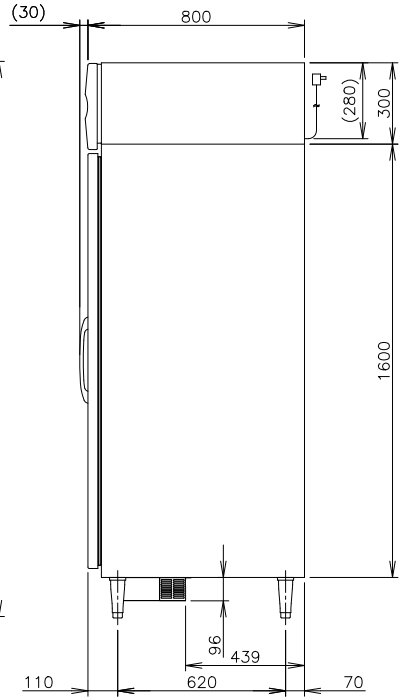

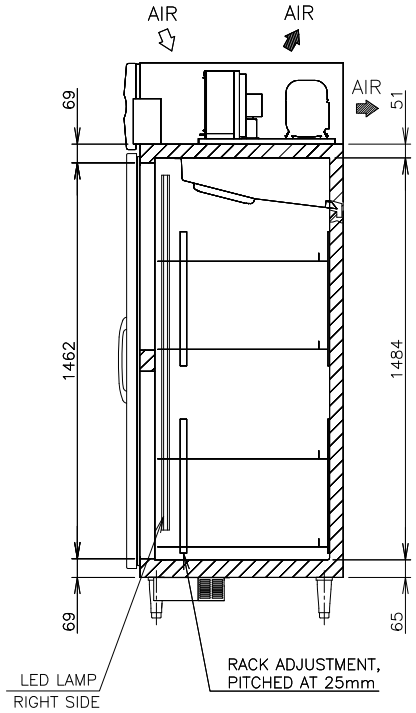

ITEM	Hoshizaki Reach-in Refrigerator
MODEL	HR-188MC-SLD
POWER SUPPLY	1 Phase 220V ~ 240V 50Hz Capacity: 0.75kVA (3.50A)
AMPERAGE	Rated: 3.3A
ELECTRIC CONSUMPTION	MOTOR 366W(POWER FACTOR 79%) Heater 424W Refrigeration 512W Defrost 250W
HEAT REJECTION	1223W
POWER CORD	Plug with Earth Wire
EFFECTIVE CAPACITY	1656L △1
OUTSIDE DIMENSIONS	1800mm(W) x 800mm(D) x 2050(-2080)mm(H)
INSIDE DIMENSIONS	1696mm(W) x 646mm(D) x 1484mm(H)
EXTERIOR	Stainless Steel, Galvanized Steel(Top, Rear, Bottom)
INTERIOR	Stainless Steel, ABS Plastic(Door)
INSULATION	Polyurethane Foam
INSULATION FOAM BLOWING AGENT	Cyclopentane
REFRIGERATION SYSTEM	Forced Air Circulation
DEFROST SYSTEM	Heater
COMPRESSOR	Hermetic
CONDENSER	Wire and Tube type, Air-cooled
EVAPORATOR	Fin and Tube type
REFRIGERANT	R290
TEMPERATURE CONTROL	Microprocessor (Digital Temp. Indication) Adjustable from -6 to 12° C
DEFROST CONTROL	Microprocessor
ELECTRIC CIRCUIT PROTECTION	Earth Wire, Circuit Breaker
REFRIGERANT CIRCUIT PROTECTION	Motor Protector (Auto-reset)
LEG	Plastic Adjustable from 150 to 180mm
SHELF	12pcs.
WEIGHT	173kg (Gross 214kg)
PACKAGE	Carton (Wooden Pallet) 1860mm(W) x 900mm(D) x 2075mm(H)
ACCESSORIES	Drain Hose x 1,Drain Pan x 1
OPERATING CONDITIONS	Ambient Temperature: 5 - 38℃ Voltage Range: Rated Voltage ±6%

*We reserve the right to make changes in specifications and design without prior notice.

1. Install the product properly in accordance with the instructions on location, water supply/drain connections and electrical connections stated in the instruction and installation manuals provided.
   Allow 10mm extra space at the installation site to meet any installation requirements (additional spacing is also required for proper air flow and pipe connections).
2. The heat rejection is based on the reached pulldown temperature at ambient temperature of 35℃
3. Product Code: S177-V190(VIETNAM) △1
   S177-V290(INDONESIA)
   S177-V390(THAILAND)
   S177-V490(MALAYSIA)

HOSHIZAKI REACH-IN REFRIGERATOR HR-188MC-SLD

APPROVED	CHECKED	DESIGNED	DRAWN	SCALE	
LIANGK	LIUH	LXF	LXF	1/20	TRIGONOMETRY
LIANGK (APPROVED)	LY (DESIGNED)	△1 (SYMBOL)	2025.11.27 (DATE)	DATE 2025.9.24	DRAWING NO. D43574 / SYMBOL △1

000520
施行